EN

MECALAC

8 MCR rail-road

# 8 MCR rail-road

MECALAC

# 14 MPH
## ON RAIL

OUR TRADITION

# INNOVATION IN MOTION

Innovation moves mountains; it makes the world turn. We will never stop coming up with new features, striving to improve our current technology and adapting to changing realities and constraints faced; we will excel. Innovation lies at the very core of what our company stands for.

# MECALAC: SUPPLIER OF RAIL SOLUTIONS

As a common feature and denominator to all Mecalac excavators, the unique 3-piece-boom with integrated offset, provides the machine with unmatched compactness and versatility. On this basis, Mecalac has developed the MCR range, a new innovative concept based on the perfect fusion of a loader with total rotation and a compact crawler excavators that can travel up to 6.2 mph (10 km/h). Mecalac has chosen the 8MCR model to develop the first machine of its kind specialized for work in rail applications: the 8MCR Rail-Road.

The 8MCR Rail-Road provides the optimum in compactness combined with highest-in-class performance - required for the majority of service work and railway maintenance.

# 30° LEFT & RIGHT OFFSET

## YOUR 8MCR RAIL-ROAD

- 2 hi-rail assemblies with 4 self-propelled wheels
- 2 independent hydraulic pumps for travelling and working
- Independent control of hi-rails for comfortable re- or de-railing
- Hydrostatic transmission with closed circuit and automotive control
- Auxiliary hydraulic circuit with pressure setting in a range of 7.9 to 26.4 gpm (30 to 100 l/min)
- Hydraulic performance and precision by a load sensing system combined with flow sharing
- Diameter of rail wheels: 19.69 in (500 mm) (UIC)

| DATA | |
|---|---|
| Operating weight | 19842 lbs (9000 kg) |
| Engine performance | 75 hp / 55 kW |
| Speed on-ground | 6.2 mph (10 km/h) |
| Speed on-rail | 14.3 mph (23 km/h) |
| Transmission on-rails | hydraostatic, independant; 4 self-propelled rail wheels |
| Boom Kinematics | Mecalac 3-piece boom with variable adjustment and integrated offset (left/right) |
| Max reach | 22 ft (6700 mm) |
| Max digging depth | 11.8 ft (3600 mm) |
| Max lifting capacity at 8.2 ft (2,5m) | 6614 lbs (3000 kg) |
| Max lifting capacity at 14.8 ft (4,5m) | 3307 lbs (1500 kg) straight ; 2205 lbs (1000 kg) in 360° rotation |

+

# 14 MPH ON RAIL

## COMPACTNESS

- The short rear radius ensures that the machine works within the minimum clearance outline
- The all around compactness allows for easy handling in tunnels or subway networks
- High maneuverability in constricted or cramped working areas
- The patented boom kinematics allows for work very close to the machine
- An integrated boom offset designed for increased flexibility and a larger working envelope
- Transport possible on a standard-size 6x4 truck or a dump-truck

## BALANCE

Superior balance is the basis of numerous benefits of the Mecalac 8MCR Rail-Road. The patented design of the Mecalac boom gives the machine an extraordinary weight distribution.
Along with the tracked chassis the machine achieves best-in-class stability, combined with uncompromising compactness and maximum performance.

The machine provides the operator with a natural 360° visibility. This ensures that the driver is at all times aware of what is happening around the machine – on the rail track or next to it. There is no counterweight in the rear field of vision. The Mecalac boom, with its high level of flexibility, adapts precisely to every job site condition. The 8MCR Road-Rail has been designed for total operator vision on the work area and its environment.

# VISIBILITY

Up to

**6600 LBS AT 8.2 FT**

## PERFORMANCE

The 8MCR Rail-Road excavator is the ideal solution for users looking for a compact machine with high performance.
The key values are unique:

- Load handling of 3.3 tons (3 metric tons) at a distance of 8.2 ft (2.5 m) from the center of the rail track
- Lifting of 1.1 tons (1 metric ton) in a full turning radius of 14.8 ft (4.5 m)
- Loading of 1323 lbs (600 kg) at a maximum reach of 19.7 ft (6 m)
- Ability to use hydraulic attachments usually used by larger-sized machines, such as the special railway clamshell, a ballast tamping head or a mechanical or hydraulic sleeper layer.

# 360° ALL-AROUND VISIBILITY

## SECURITY

- On-demand height limitation of boom when working under overhead lines
- On-demand rotation limiting of upperframe when working parallel to an adjacent railway track
- Approved by the French National Railway Authority (SNCF)
- All daily maintenance accessible from ground level
- Hose rupture safety valves on all hydraulic cylinders and on each hi-rail
- Equipped with an overload warning device
- Hydrostatic braking system, parking brake and emergency stop
- Emergency system providing repositioning of boom and upperframe for towing
- CONNECT quick coupler with constant pressure for efficent and safe handling of tools
- High-performing light equipment for work at night

# TECHNICAL DATA

| WEIGHT | DATA |
|---|---|
| Without load, in working order, without bucket, with rubber tracks, full fuel tank and operator | 19842 lbs (9000 kg) |
| Additional counterweigh included | 937 lbs (425 kg) |
| Ground Pressure | 6.8 lb/in$^2$ (0,48 kg/cm$^2$) |
| **ENGINE** | |
| Turbo charged engine with intercooler, EGR valve and catalytic converter (DOC), complying with standard | U.S. EPA Tier 4 Final*<br>EU Stage V* |
| Diesel 4 in-line cylinders | DEUTZ TCD 2,9 L4 |
| Horsepower (DIN 70020)<br>Engine speed | 75hp (74.3 imperial hp) (55.4 kW)<br>2000/2300 rpm |
| Maximum torque | 221.3 ft-lb (300 Nm)<br>at 1600 rpm |
| Displacement | 177 in$^3$ (2900 cm$^3$) |
| Cooling | water |
| Air filter, cyclonic, dry, cartridge | • |
| Machine external sound level | 99 dB |
| Fuel tank capacity | 19.3 gal (73 l) |
| **ELECTRICAL CIRCUIT** | |
| Batteries | 12 V (100 A) |
| Voltage | 12 V |
| Alternator | 14 V (95 A) |
| Starter | 12 V ( 2,7 kW) |
| **UNDERCARRIAGE** | |
| Central X frame chassis. Triangular beams | • |
| Rubber tracks | width 1.48 ft (450 mm) |
| Travelling rollers/Support roller | 6/1 |
| Tracks tension: sprung shock absorber with grease stress chamber | • |
| 2 independent front & rear bogies controlled by 2 cylinders with safety valves. Remaining automatic pressure during translation of the machine. | |
| **TRANSMISSION ON TRACKS** | |
| Closed circuit hydrostatic transmission **SENSO DRIVE** | |
| Transmission hydraulics: 1 dual variable displacement pump, automotive power control<br>- Flow rate<br>- Maximum pressure<br>- 2 x 2 speed gear motors with automatic brakes | <br>2x 26.4 gal/min (100 l/min)<br>5221.4 psi (360 bar) |
| Foot pedal control in excavator mode | • |
| Joystick control in loader mode<br>- Drawbar pull<br>- Travel speed Range I<br>Range II | <br>12139.7 lbf (5400 daN)<br>3.1 mph (5 km/h)<br>6.2 mph (10 km/h) |
| **TRANSMISSION - LORRIES** | |
| 4 hydraulic independant engines with parking brake at loss of pressure | • |
| Transmission and hydrostatic brakes with closed circuit | • |
| Foot pedal control | • |
| Speed on rail | 14.3 mph (23 km/h) |
| 4 hydrostatically driven rail wheels | Ø19.69 in (500 mm) |
| Railway type | UIC 56.5 in (1435 mm) |

*According to National regulation - Environmental Protection Agency (EPA)

| HOMOLOGATION (FRENCH RAILWAY, SNCF) | DATA |
|---|---|
| Electronic height limiter of the boom 12.8 ft (3.92 m) and 14 ft (4.28 m) | with 2 pairs of redundant circuits |
| Electronic swing limiter of the upperstructure | with mechanical safety stop |
| Electrical emergency pump | • |
| **HYDRAULIC SYSTEM** | |
| **ATTACHMENT AND ROTATION CIRCUIT** | |
| Variable displacement pump | 3.8 in$^3$ (63 cm$^3$) |
| **ACTIVE CONTROL** power control<br>"Load Sensing - Flow Sharing" type LUDV main control valve block, proportionality of functions maintained regardless of the pressure level in individual elements | 7SX12 |
| - Maximum flow rate<br>- Maximum working pressure | 31.7 gal/min (120 l/min)<br>4061.1 psi (280 bar) |
| **STANDARD AUXILIARY LINE** | |
| Maximum flow available | 23.8 gal/min (90 l/min) |
| Minimum flow available | 5.3 gal/min (20 l/min) |
| Flow can be set via control panel (factory setting) | 21.1 gal/min (80 l/min) |
| Pressure can be set between 1740.5 psi and 4061.1 psi (120 and 280 bar) (factory setting) | 2610.7 psi (180 bar) |
| Proportional hydraulic control of the attachment integrated on right-hand joystick | • |
| **EXTRA AUXILIARY LINE (DIVERTED FROM OFFSET CYLINDER)** | |
| Maximum flow available | 7.9 gal/min (30 l/min) |
| Flow can be set via control panel (factory setting) | 7.9 gal/min (30 l/min) |
| Pressure maximum (fixed) | max. 4061.1 psi (280 bar) |
| Proportional hydraulic control of the attachment integrated on right-hand joystick | option |
| **OTHER HYDRAULIC FUNCTIONS** | |
| The **cylinder coupling** function simultaneously combines the movements of the two cylinders of the boom to enable operation like an excavator with a one-piece boom | |
| The **bucket direction inversion** function enables the operator to reverse the controls of the bucket cylinder with the right joystick to simulate the maneuvering direction of a loader | |
| **TURRET** | |
| Full rotation | 360° |
| Swing by slow hydraulic motor with automatic braking by discs equipped with anti-bounce pressure relief valve | • |
| Driven by internal crown slewing wheel | • |
| Swing speed | 10 rpm |
| Swing torque | 3799.3 lbf (1690 daNm) |
| **CAB** | |
| Comfortable panoramic cab | ROPS and FOPS |
| Monocoque cab fastened to 4 spring posts | • |
| Front windshield partially or fully retractable | under the cab roof |
| Seat can be set and adjusted to operator height and weight | • |
| Water heating system compliant with ISO 10263 | • |
| Controls assisted by ergonomic, proportional joysticks | • |
| Dial display of fuel level and coolant temperature | • |
| Control panel including colour screen | • |
| Proportional hydraulic control of the attachment integrated on right-hand joystick | • |
| Front working light | • |
| Rear storage area | • |
| Sound level in cab | 78 db(A) |
| Air-conditioning | option |
| Stereo USB radio | option |
| Heated and air suspended seat | option |

**Standard and optional equipment may vary. Consult your Mecalac dealer for details.**

# LIFTING CAPACITY

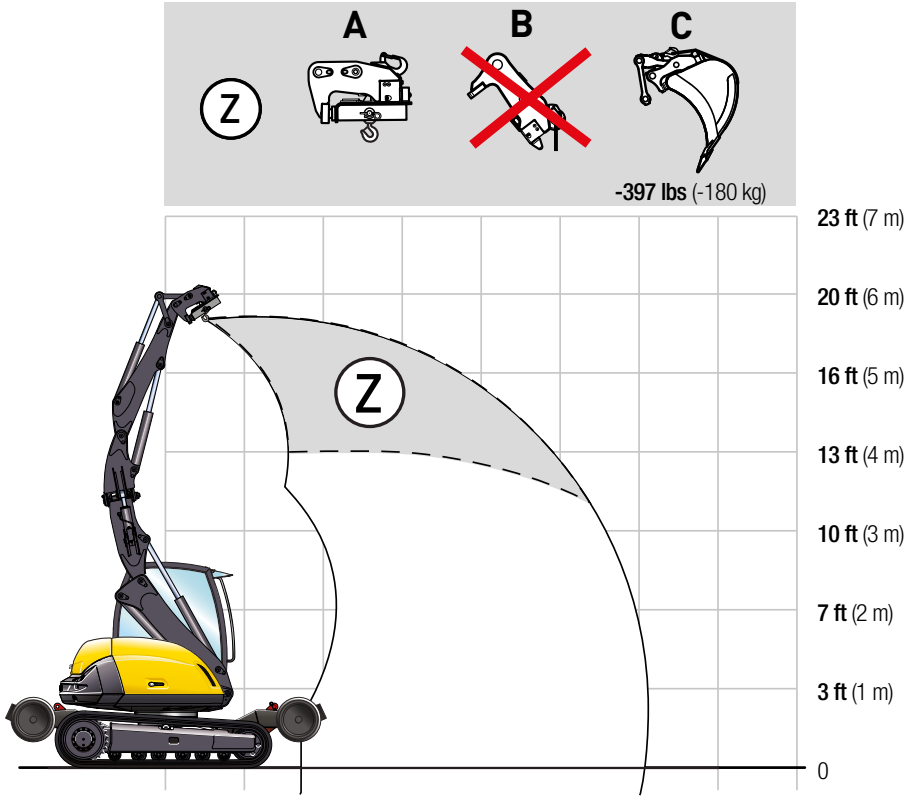


## MACHINE ON TRACKS WITHOUT INCLINATION

**All the weights are given in lb** (kg) with CONNECT.

| HEIGHT OF THE LIFTING POINT | RADIUS OF THE LIFTING POINT | | | | | | | | | |
|---|---|---|---|---|---|---|---|---|---|---|
| | 6.6 ft (2 m) | | 9.8 ft (3 m) | | 13.1 ft (4 m) | | 16.4 ft (5 m) | | 19.7 ft (6 m) | |
| | 0° | 360° | 0° | 360° | 0° | 360° | 0° | 360° | 0° | 360° |
| 16.4 ft (5 m) | 4409 (2000) | 4409 (2000) | 4409 (2000) | 3968 (1800) | 2976 (1350) | 2315 (1050) | - | - | - | - |
| 9.8 ft (3 m) | 5071 (2300) | 4850 (2200) | 4409 (2000) | 3748 (1700) | 2866 (1300) | 2205 (1000) | 1764 (800) | 1433 (650) | 1213 (550) | 992 (450) |
| 4.9 ft (1.5 m) | 5071 (2300) | 4850 (2200) | 4189 (1900) | 3417 (1550) | 2535 (1150) | 1874 (850) | 1653 (750) | 1323 (600) | 1213 (550) | 882 (400) |
| 0 ft | 5071 (2300) | 4850 (2200) | 3968 (1800) | 2976 (1350) | 2205 (1000) | 1764 (800) | 1543 (700) | 1213 (550) | 1102 (500) | 882 (400) |
| -3.3 ft (-1 m) | 5071 (2300) | 4850 (2200) | 3748 (1700) | 2646 (1200) | 2205 (1000) | 1653 (750) | 1433 (650) | 1102 (500) | 1102 (500) | 882 (400) |
| -6.6 ft (-2 m) | 4409 (2000) | 4409 (2000) | 3086 (1400) | 2646 (1200) | 1984 (900) | 1653 (750) | 1433 (650) | 1102 (500) | 1102 (500) | 882 (400) |
| -9.8 ft (-3 m) | 4409 (2000) | 4409 (2000) | 2205 (1000) | 2205 (1000) | 1213 (550) | 1213 (550) | 882 (400) | 882 (400) | - | - |

## MACHINE ON HI-RAILS WITHOUT INCLINATION

**All the weights are given in lb** (kg) with CONNECT.

| HEIGHT OF THE LIFTING POINT | RADIUS OF THE LIFTING POINT | | | | | | | | | |
|---|---|---|---|---|---|---|---|---|---|---|
| | 6.6 ft (2 m) | | 9.8 ft (3 m) | | 13.1 ft (4 m) | | 16.4 ft (5 m) | | 19.7 ft (6 m) | |
| | 0° | 360° | 0° | 360° | 0° | 360° | 0° | 360° | 0° | 360° |
| 16.4 ft (5 m) | 4409 (2000) | 4409 (2000) | 4409 (2000) | 4409 (2000) | 3527 (1600) | 2646 (1200) | - | - | - | - |
| 9.8 ft (3 m) | 5732 (2600) | 5732 (2600) | 4630 (2100) | 4299 (1950) | 3527 (1600) | 2646 (1200) | 2910 (1320) | 1698 (770) | 2425 (1100) | 1213 (550) |
| 4.9 ft (1.5 m) | 6173 (2800) | 6173 (2800) | 4630 (2100) | 4189 (1900) | 3738 (1700) | 2425 (1100) | 2866 (1300) | 1698 (770) | 2425 (1100) | 1102 (500) |
| 0 ft | 6173 (2800) | 6173 (2800) | 4630 (2100) | 3638 (1650) | 3968 (1800) | 2205 (1000) | 2866 (1300) | 1543 (700) | 1984 (900) | 1102 (500) |
| -3.3 ft (-1 m) | 5291 (2400) | 5291 (2400) | 5071 (2300) | 3307 (1500) | 3307 (1500) | 2094 (950) | 2425 (1100) | 1433 (650) | 1653 (750) | 1102 (500) |
| -6.6 ft (-2 m) | 4409 (2000) | 4409 (2000) | 3086 (1400) | 3086 (1400) | 1984 (900) | 1984 (900) | 1433 (650) | 1433 (650) | 1102 (500) | 1102 (500) |
| -9.8 ft (-3 m) | 4409 (2000) | 4409 (2000) | 2205 (1000) | 2205 (1000) | 1213 (550) | 1213 (550) | 882 (400) | 882 (400) | - | - |

## MACHINE BOGIES ON RAIL WITH INCLINATION ≤ 7° 7.1 IN (180 MM)

**All the weights are given in lb** (kg) with CONNECT.

| HEIGHT OF THE LIFTING POINT | RADIUS OF THE LIFTING POINT | | | | | | | | | |
|---|---|---|---|---|---|---|---|---|---|---|
| | 6.6 ft (2 m) | | 9.8 ft (3 m) | | 13.1 ft (4 m) | | 16.4 ft (5 m) | | 19.7 ft (6 m) | |
| | 0° | 360° | 0° | 360° | 0° | 360° | 0° | 360° | 0° | 360° |
| 16.4 ft (5 m) | 4409 (2000) | 4409 (2000) | 4409 (2000) | 3968 (1800) | 3527 (1600) | 2315 (1050) | - | - | - | - |
| 9.8 ft (3 m) | 5732 (2600) | 4850 (2200) | 4630 (2100) | 3738 (1700) | 3527 (1600) | 2205 (1000) | 2910 (1320) | 1433 (650) | 2425 (1100) | 992 (450) |
| 4.9 ft (1.5 m) | 6173 (2800) | 4850 (2200) | 4630 (2100) | 3417 (1550) | 3738 (1700) | 1874 (850) | 2866 (1300) | 1433 (650) | 2425 (1100) | 882 (400) |
| 0 ft | 6173 (2800) | 4850 (2200) | 4630 (2100) | 2976 (1350) | 3968 (1800) | 1764 (800) | 2866 (1300) | 1213 (550) | 1984 (900) | 882 (400) |
| -3.3 ft (-1 m) | 5291 (2400) | 4850 (2200) | 5071 (2300) | 2646 (1200) | 3307 (1500) | 1653 (750) | 2425 (1100) | 1102 (500) | 1653 (750) | 882 (400) |
| -6.6 ft (-2 m) | 4409 (2000) | 4409 (2000) | 3086 (1400) | 2646 (1200) | 1984 (900) | 1653 (750) | 1433 (650) | 1102 (500) | 1102 (500) | 882 (400) |
| -9.8 ft (-3 m) | 4409 (2000) | 4409 (2000) | 2205 (1000) | 2205 (1000) | 1213 (550) | 1213 (550) | 882 (400) | 882 (400) | - | - |

Working in longitudinal position on blade side

Working in transverse position

### WORKING CONDITIONS

- On horizontal, compact ground
- Equipment used without offset
- Without tool (bucket, shovel…)
- With rubber tracks 1.5 ft (450 mm)
- Maximal 75% of the tipping load or 87% of the hydraulic capacity
- Maximum values determined for optimal position of boom and cylinders

- With handling plate and loading hook of 3.2 MT (**A**) : minus 110 lbs (50 kg) to each values
- With Mecalac quick-coupler + lifting hook: 3.3 MT (**B**) (except area Z)
- With 2 ft (600 mm) bucket (**C**): 397 lbs (180 kg) to be deducted from shown values
- The lifting device must not rub on a sharp edge
- The lifting device must not act on the locking lever of the lifting hook

Machine on rail tracks

Machine bogies on rail

# LIFTING CAPACITY - PALLET FORK - MACHINE ON TRACKS

## LIFTING CAPACITIES WITH PALLET FORKS

**All the weights are given in lb** (kg) with CONNECT.

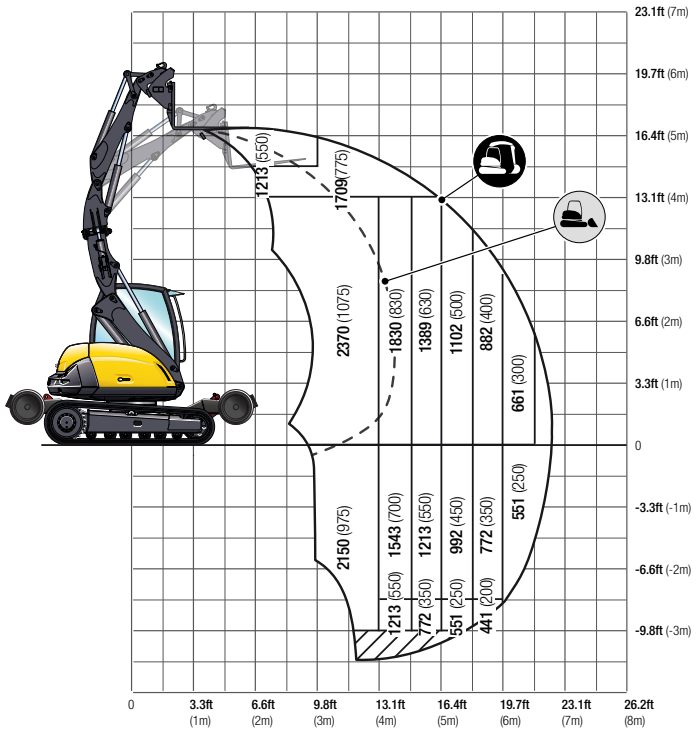


Machine on tracks

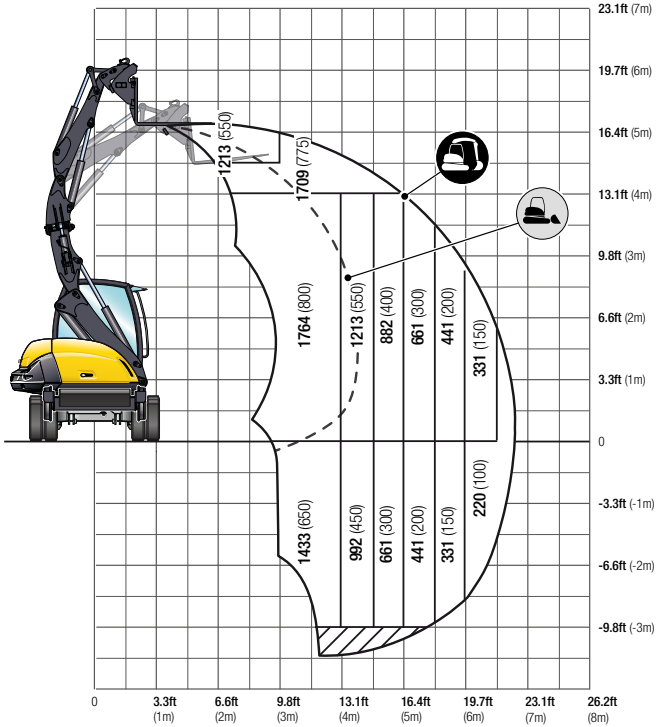


Machine on tracks - 90° work

Lifting capacities in excavator mode

Lifting capacities in loader mode

### WORKING CONDITIONS

- On horizontal, compact ground
- Equipment used without offset
- Equiped with pallet fork
- Boom equiped with 4 safety valves
- With 1702 lbs (772 kg) counterweight + 937 lbs (425 kg) additional mass

### ACCORDING TO ISO 10567

- Maximal 75% of the tipping load or 87% of the hydraulic capacity
- Maximum values determined for the most unfavorable position of booms and cylinders

# LIFTING CAPACITY - PALLET FORK - HI-RAILS ENGAGED

## LIFTING CAPACITIES WITH PALLET FORKS

**All the weights are given in kg** (lb) with CONNECT.

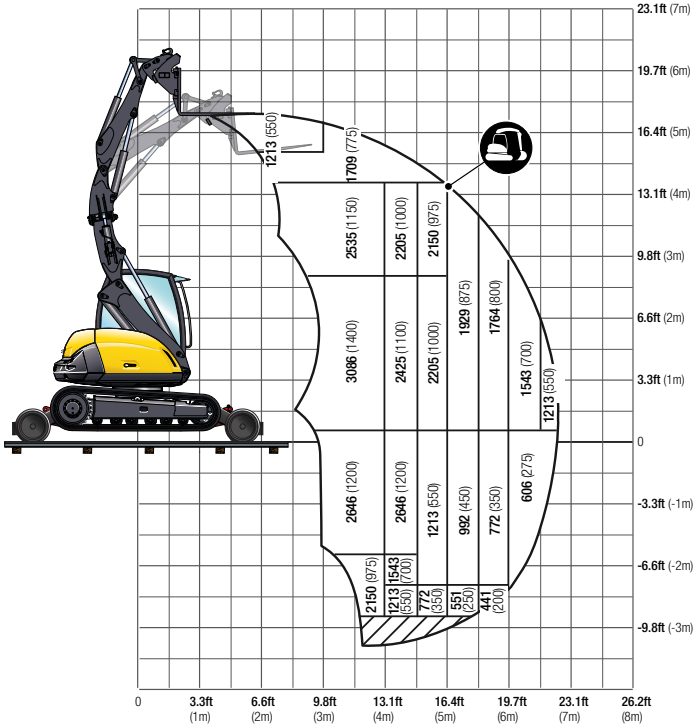


Lifting capacity - Hi-Rails Engaged

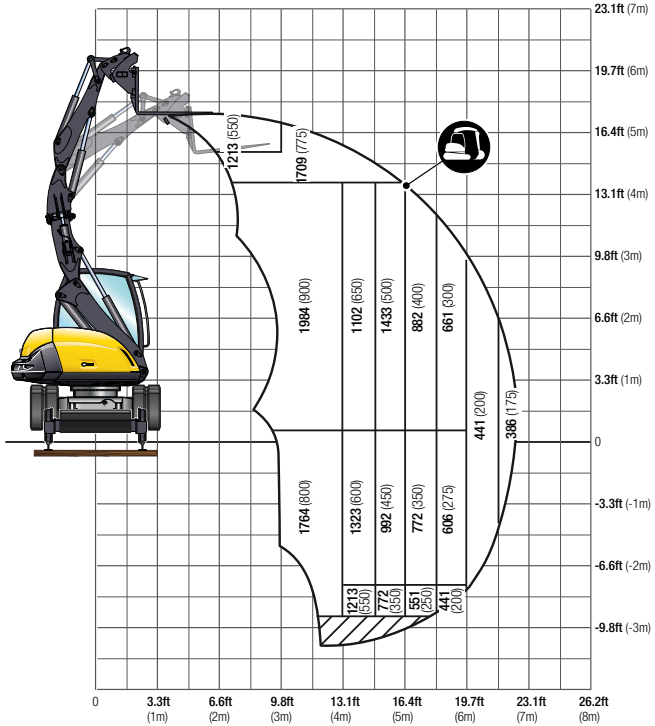


Lifting capacity - Hi-Rails Engaged,
90° working without inclination

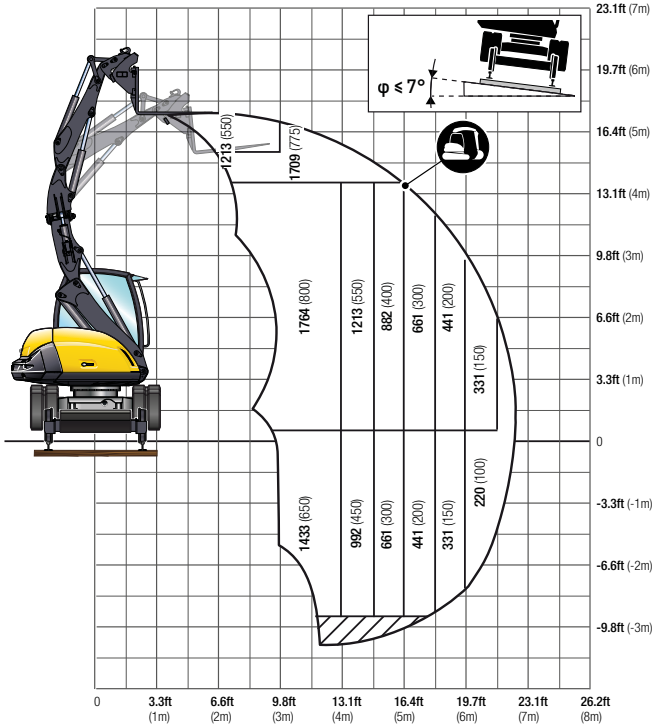


Lifting capacity - Hi-Rails Engaged,
90° working with 7° inclination 7.1 in (180 mm)

### WORKING CONDITIONS

- On horizontal, compact ground
- Equipment used without offset
- Equiped with pallet fork
- Boom equiped with 4 safety valves
- With 1702 lbs (772 kg) counterweight + 937 lbs (425 kg) additional mass

### ACCORDING TO ISO 10567

- Maximal 75% of the tipping load or 87% of the hydraulic capacity
- Maximum values determined for the most unfavorable position of booms and cylinders

Materials and specifications are subject to change without notice. Actual products may differ from photos. Featured machines in photos may include additional equipment. See your Mecalac dealer for available options.
2019 Mecalac ®. All rights reserved.
**MK340/EN**-11/19 **Design** Les Alchimistes **Layout** Service communication Mecalac **Photo credits** Christian Rome **Printed by** Kallstene **Non-binding document**

**MECALAC FRANCE S.A.S.**
2, avenue du Pré de Challes
Parc des Glaisins – CS 40230
Annecy-le-Vieux
FR - 74942 Annecy Cedex
Tel. +33 (0)4 50 64 01 63

**MECALAC BAUMASCHINEN GMBH**
Am Friedrichsbrunnen
D-24782 Büdelsdorf
Tel. +49 (0)43 31/3 51-319

**MECALAC CONSTRUCTION EQUIPMENT UK LTD**
Central Boulevard,
ProLogis Park
Coventry, CV6 4BX, UK
Tél. +44 (0)24 7633 9539

**MECALAC İŞ MAKINELERI SAN VE TIC. LTD. ŞTI.**
Ege Serbest Bölgesi Nilüfer 1 Sok. No: 34
35410, Gaziemir
İzmir - Türkiye
Tel. +90 232 220 11 15

**WWW.MECALAC.COM**